CHAPTER 20

2 1/4″ SWINGING FRENCH DOORS

Table of Contents

	PAGE
History	20.2
Part Identification – Wood 2 1/4″ Outswing French Door	20.3
Part Identification – Wood 2 1/4″ Outswing French Door Stationary	20.4
Part Identification – Clad 2 1/4″ Outswing French Door	20.5
Part Identification – Wood 2 1/4″ Inswing French Door	20.6
Part Identification – Wood 2 1/4″ Inswing French Door Stationary	20.7
Part Identification – Clad 2 1/4″ Inswing French Door	20.8
Part Identification – Wood 2 1/4″ Outswing Arch Top French Door	20.9
Part Identification – Clad 2 1/4″ Outswing Arch Top French Door	20.10
Part Identification – Wood 2 1/4″ Inswing Arch Top French Door	20.11
Part Identification – Clad 2 1/4″ Inswing Arch Top French Door	20.12
Replacement Parts	20.13
Panel Replacement	20.21
Weather Strip	20.22
Replacement Aluminum and Wood Parts	20.24
Obsolete Parts	20.26
Sliding / Swinging Screens and Screen Parts	See Chapter 13

ATTENTION:

- Specification and technical data are subject to change without notice.
- Numbers listed in parentheses ( ) are metric equivalents in millimeters rounded to the nearest whole number.

HISTORY

PRODUCED	UNIT TYPE	FEATURES OR CHANGES	STATUS
2005	IZ3 2 1/4″ Panel Doors	5/31/2005 2 1/4″ Panel StormPlus IZ3 doors introduced. Units feature multi–point lock, LVL stiles and rails, and 4 1/2″ x 4 1/2″ ball bearing hinges.	Present
2005	IZ4 2 1/4″ Panel Doors	9/06/2005 Introduced 2 1/4″ Panel door for StormPlus IZ4.	Present
2006	2 1/4″French Doors	11/20/2006 Introduced the 2 1/4″ door as a standard residential product.	Present
2007	2 1/4″French Doors	2/20/07 Introduced raised and flat panels as a standard option for Marvin French Doors and Commercial Doors.	Present
2008	Clad 2 1/4″French Doors	7/28/2008 Mixed grain Douglas fir is now a standard option.	Present
2009	All	3/23/2009 Added LoĒ^3-366™ as a standard option for all products. Added Cedro Macho as a standard option for all clad products.	Present
2009	2 1/4″ Outswing French Doors and 2 1/4″ Outswing Arch Top French Doors	3/30/2009 Implemented design changes to the 2 1/4″ Outswing. Changes include new panel sweep, dust blocks, IZ3/IZ4 wood bead and shoot bolt reinforcement.	Present
2010	All Doors	2/22/2010 Added Dark Bronze hardware finish to doors.	Present
2011	All Doors	4/25/2011 Added LoĒ-180™ as a standard option for all products. White painted interior finish option introduced for all products.	Present
2012	All Doors	7/30/2012 Adjustable Hinge became standard. 10/29/2012 Interior Square Sticking/Glazing Bead option introduced. 12/17/2012 Introduced Clear Interior Finish option on all products.	Present
2013	All Doors	4/29/2013 – Introduced interior stain options. Stain colors are Wheat, Honey, Leather, Hazelnut, Cabernet and Espresso.	Present
	2 1/4″ Inswing and Outswing French Doors	12/16/2013 – Interior Shades option introduced.	

PART IDENTIFICATION

Wood 2 1/4″ Outswing French Door

Also available with IZ3 and IZ4 glazing.

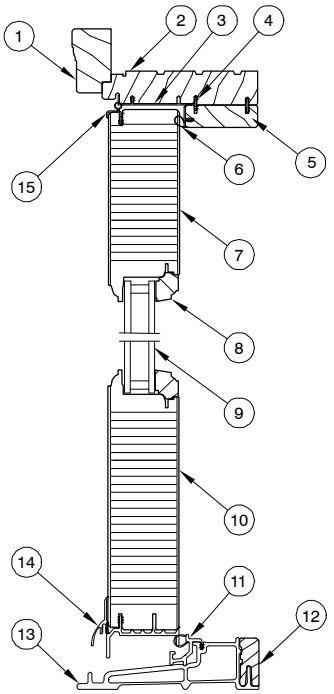

Head Jamb and Sill

1. Head Jamb Brick Mould Casing
2. Head Jamb
3. Head Jamb Weather Strip
4. Connecting Barb
5. Head Jamb Stop
6. Head Jamb Stop Weather Strip
7. Top Rail
8. Glazing Bead
9. Insulating Glass
10. Bottom Rail
11. Sill Weather Strip
12. Sill Liner
13. Sill
14. Panel Drip
15. Panel Cover Weather Strip
16. Jamb Brick Mould Casing
17. Jamb
18. Adjustable Hinge
19. Stile
20. Stile Weather Strip
21. Jamb Stop
22. Jamb Stop Weather Strip
23. Jamb Weather Strip
24. Exterior Handle
25. Interior Handle
26. Astragal Weather Strip
27. Astragal
28. Astragal Base
29. Inactive Panel Locking Stile
30. Active Panel Locking Stile
31. Inactive Panel Weather Strip

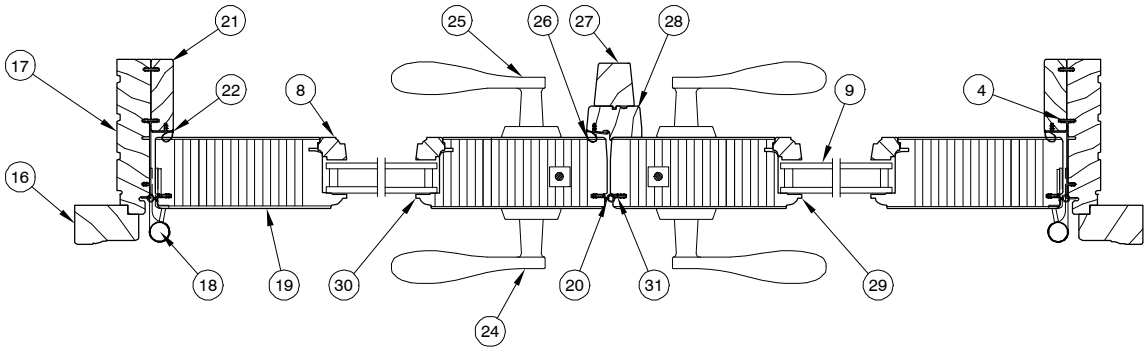

Jamb XX–R

NOTE: Not to scale; specifications subject to change without notice.

PART IDENTIFICATION

Wood 2 1/4″ Outswing French Door Stationary

Also available with IZ3 and IZ4 glazing.

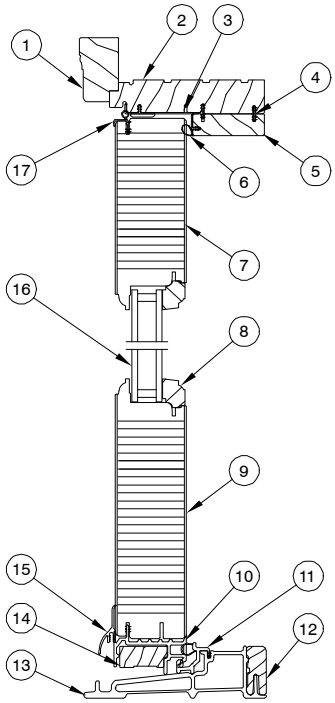

Head Jamb and Sill

1. Head Jamb Brick Mould Casing
2. Head Jamb
3. Head Jamb Weather Strip
4. Connecting Barb
5. Head Jamb Stop
6. Head Jamb Stop Weather Strip
7. Top Rail
8. Glazing Bead
9. Bottom Rail
10. Sweep
11. Sill Weather Strip
12. Sill Liner
13. Sill
14. Stationary Sweep Filler
15. Panel Drip
16. Insulating Glass
17. Panel Cover Weather Strip
18. Jamb Brick Mould Casing
19. Jamb
20. Jamb Stop
21. Jamb Weather Strip
22. Stationary Stile
23. Connecting Barb
24. Frame Weather Strip
25. Spacer Tack
26. Stile Weather Strip[

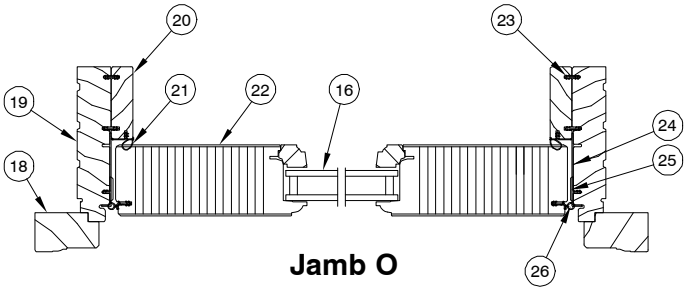

Jamb O

NOTE: Not to scale; specifications subject to change without notice.

PART IDENTIFICATION

Clad 2 1/4″ Outswing French Door

Also available with IZ3 and IZ4 glazing.

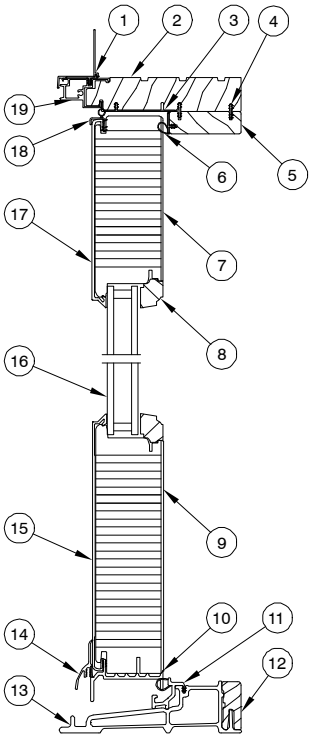

Head Jamb and Sill

1. Nailing Fin/Drip Cap
2. Head Jamb
3. Frame Weather Strip
4. Connecting Barb
5. Head Jamb Stop
6. Head Jamb Stop Weather Strip
7. Top Rail
8. Glazing Bead
9. Bottom Rail
10. Sweep
11. Sill Weather Strip
12. Sill Liner
13. Sill
14. Panel Drip
15. Bottom Rail Cladding
16. Insulating Glass
17. Top Rail Cladding
18. Panel Cover Weather Strip
19. Head Jamb Cladding
20. Jamb Cladding
21. Nailing Fin
22. Jamb
23. Jamb Stop
24. Jamb Stop Weather Strip
25. Stile
26. Interior Handle
27. Astragal Weather Strip
28. Astragal
29. Astragal Base
30. Connecting Barb
31. Frame Weather Strip
32. Adjustable Hinge
33. Stile Cladding
34. Active Panel Locking Stile
35. Exterior Handle

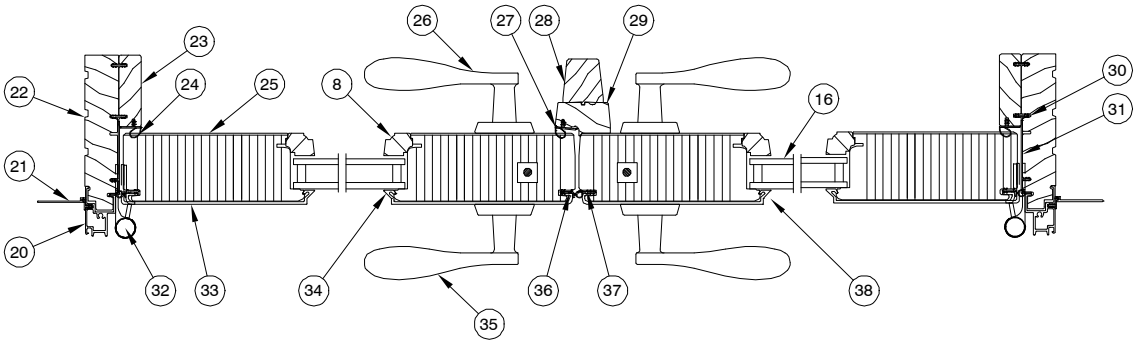

Jamb XX–R

NOTE: Not to scale; specifications subject to change without notice.

PART IDENTIFICATION

Wood 2 1/4″ Inswing French Door

Also available with IZ3 glazing.

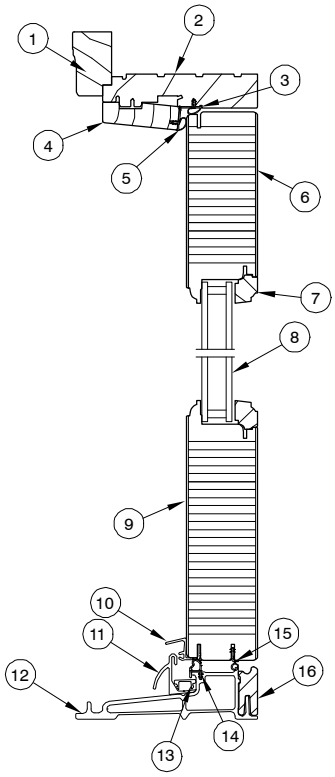

Head Jamb and Sill

1. Head Jamb Brick Mould Casing
2. Head Jamb
3. Head Jamb Weather Strip
4. Head Jamb Stop
5. Head Jamb Stop Weather Strip
6. Top Rail
7. Glazing Bead
8. Insulated Glass
9. Bottom Rail
10. Panel Drip
11. Hydro Optimizer
12. Sill
13. Hydro Optimizer Reinforcement
14. Sill Weather Strip
15. Stile Weather Strip
16. Sill Liner
17. Brick Mould Casing
18. Jamb
19. Jamb Weather Strip
20. Jamb Stop Weather Strip
21. Stile
22. Exterior Handle
23. Interior Handle
24. Active Panel Locking Stile
25. Mull Base Stile Weather Strip
26. Stile Weather Strip
27. Astragal Weather Strip
28. Astragal
29. Astragal Base
30. Ball Bearing Hinge
31. Side Jamb Parting Stop
32. Inactive Panel Locking Stile

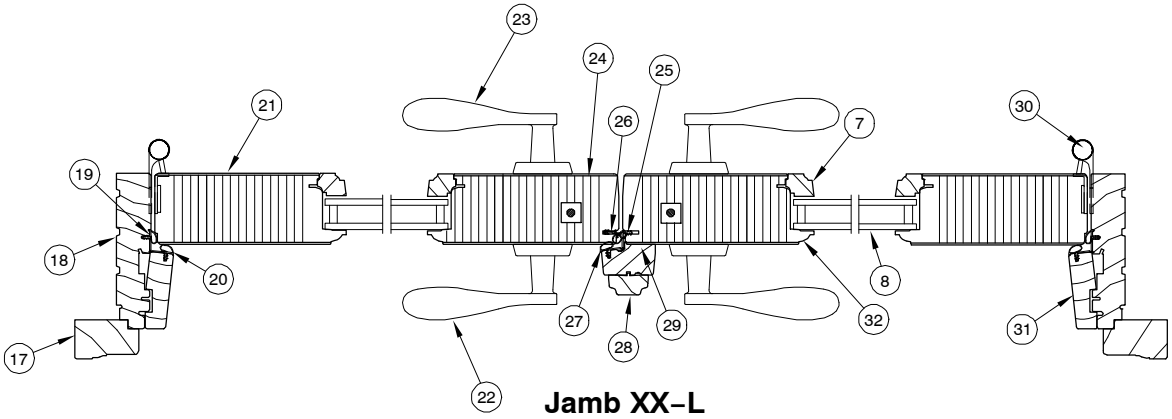

Jamb XX–L

NOTE: Not to scale; specifications subject to change without notice.

PART IDENTIFICATION

Wood 2 1/4″ Inswing French Door Stationary

Also available with IZ3 glazing.

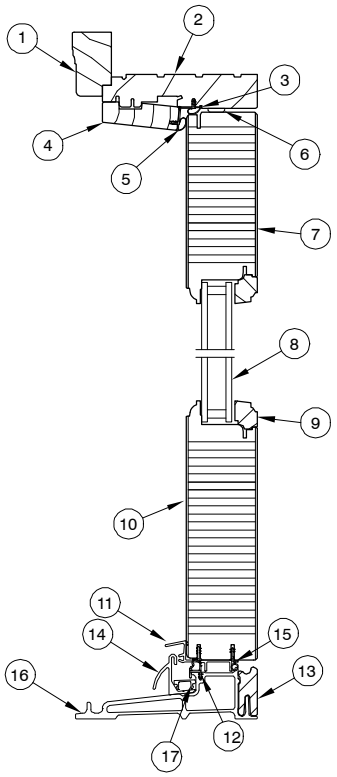

Head Jamb and Sill

1. Head Jamb Brick Mould Casing
2. Head Jamb
3. Head Jamb Weather Strip
4. Head Jamb Parting Stop
5. Head Jamb Stop Weather Strip
6. Header Spacer Tack
7. Top Rail
8. Insulating Glass
9. Glazing Bead
10. Bottom Rail
11. Panel Drip/Leveling Block
12. Sill Weather Strip
13. Sill Liner
14. Hydro−Optimizer
15. Bottom Rail Weather Strip
16. Sill
17. Hydro−optimizer Reinforcement
18. Side Brick Mould Casing
19. Side Jamb
20. Side Jamb Parting Stop
21. Side Jamb Parting Stop Weather Strip
22. Stationary Stile
23. Side Jamb Weather Strip
24. Stationary Panel Spacer Tack

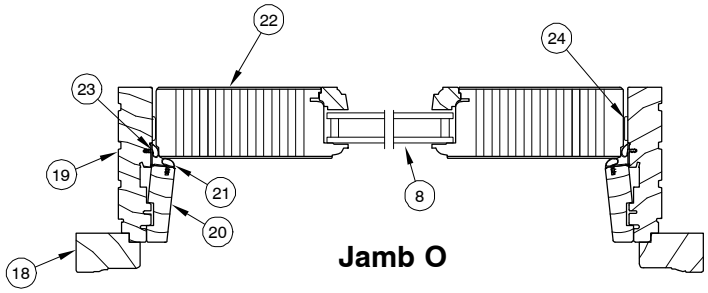

Jamb O

NOTE: Not to scale; specifications subject to change without notice.

PART IDENTIFICATION

Clad 2 1/4″ Inswing French Door

Also available with IZ3 glazing.

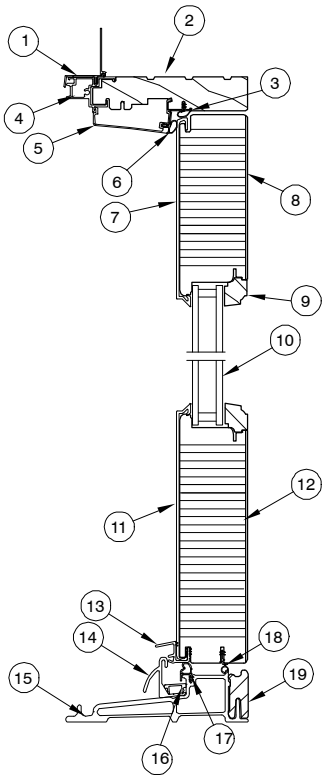

Head Jamb and Sill

1. Nailing Fin/Drip Cap
2. Head Jamb
3. Head Jamb Weather Strip
4. Head Jamb Cladding
5. Head Jamb Stop
6. Head Jamb Stop Weather Strip
7. Top Rail Cladding
8. Top Rail
9. Glazing Bead
10. Insulating Glass
11. Bottom Rail Cladding
12. Bottom Rail
13. Panel Drip
14. Hydro−Optimizer
15. Sill
16. Hydro−Optimizer Reinforcement
17. Sill Weather Strip
18. Stile Weather Strip
19. Sill Liner
20. Jamb Cladding
21. Nailing Fin
22. Jamb
23. Jamb Weather Strip
24. Jamb Stop Weather Strip
25. Stile
26. Stile Cladding
27. Exterior Handle
28. Interior Handle
29. Active Panel Locking Stile
30. Stile Weather Strip
31. Mull Base Stile Weather Strip
32. Astragal Weather Strip
33. Astragal
34. Astragal Base
35. Adjustable Hinge
36. Side Jamb Parting Stop
37. Inactive Panel Locking Stile

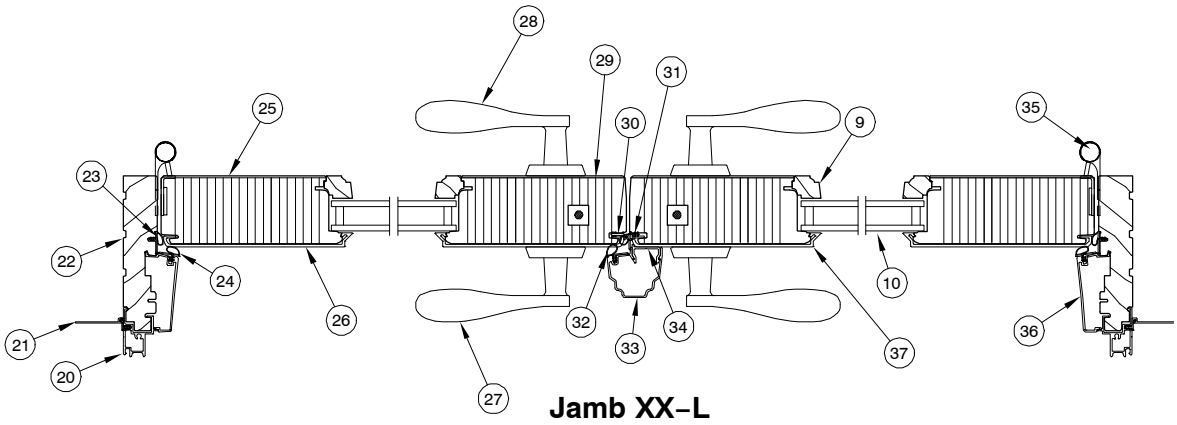

Jamb XX−L

NOTE: Not to scale; specifications subject to change without notice.

Wood 2 1/4″
Outswing Arch Top French Door

Also available with IZ3 and IZ4 glazing.

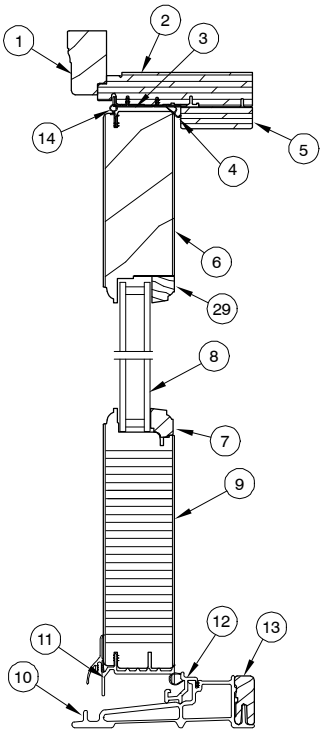

Head Jamb and Sill

1. Head Jamb Brick Mould Casing
2. Head Jamb
3. Frame Weather Strip
4. Bulb Weather Strip
5. Head Jamb Stop
6. Top Rail
7. Glazing Bead
8. Insulating Glass
9. Bottom Rail
10. Sill
11. Sweep
12. Sill Weather Strip
13. Sill Liner
14. Stile Weather Strip
15. Jamb Brick Mould Casing
16. Jamb
17. Adjustable Hinge
18. Stile
19. Stile Weather Strip
20. Jamb Stop
21. Connecting Barb
22. Exterior Handle
23. Interior Handle
24. Astragal Weather Strip
25. Astragal
26. Astragal Base
27. Inactive Panel Locking Stile
28. Active Panel Locking Stile
29. Radiused Glazing Bead
30. Inactive Panel Weather Strip

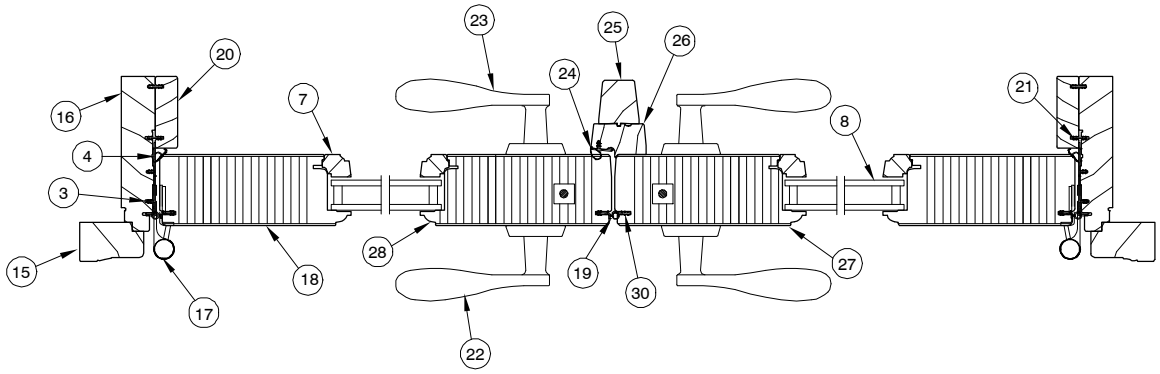

Jamb XX–R RT2
For RT6 part identification, see page 20.3.

NOTE: Not to scale; specifications subject to change without notice.

PART IDENTIFICATION

Clad 2 1/4″
Outswing Arch Top French Door

Also available with IZ3 and IZ4 glazing.

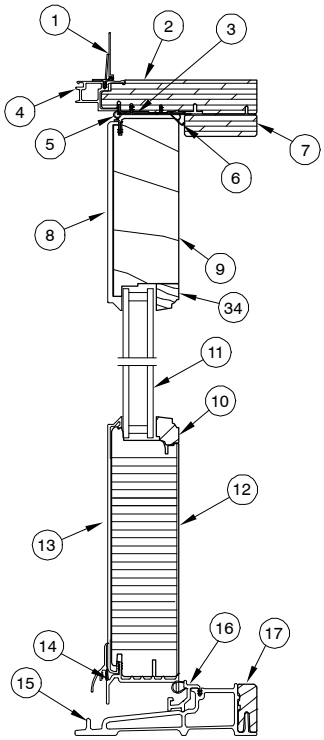

Head Jamb and Sill

1. Nailing Fin/Drip Cap
2. Head Jamb
3. Frame Weather Strip
4. Head Jamb Cladding
5. Stile Weather Strip
6. Bulb Weather Strip
7. Head Jamb Stop
8. Top Rail Cladding
9. Top Rail
10. Glazing Bead
11. Insulated Glass
12. Bottom Rail
13. Bottom Rail Cladding
14. Sweep
15. Sill
16. Sill Weather Strip
17. Sill Liner
18. Jamb
19. Nailing Fin
20. Jamb Cladding
21. Adjustable Hinge
22. Jamb Stop
23. Inactive Panel Weather Strip
24. Stile
25. Stile Cladding
26. Interior Handle
27. Exterior Handle
28. Astragal Weather Strip
29. Astragal
30. Astragal Base
31. Stile Weather Strip
32. Active Panel Locking Stile
33. Inactive Panel Locking Stile
34. Radiused Glazing Bead
35. Connecting Barb

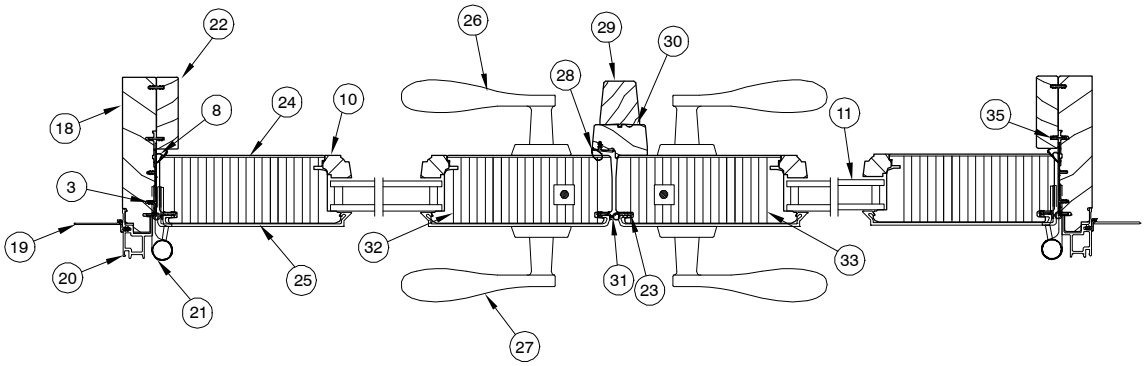

Jamb XX–R RT2
For RT6 part identification, see page 20.5

NOTE: Not to scale; specifications subject to change without notice.

Wood 2 1/4″
Inswing Arch Top French Door

Also available with IZ3 glazing.

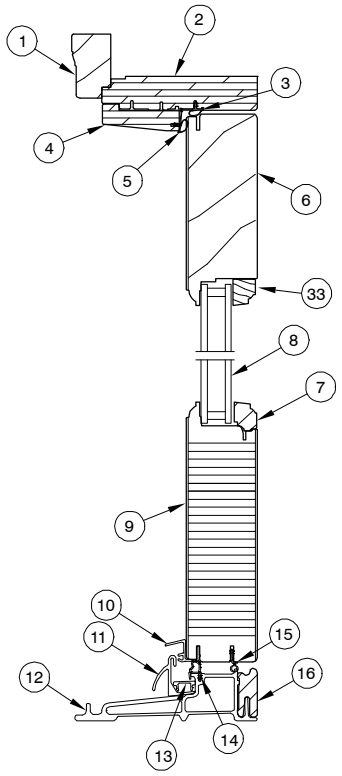

1. Head Jamb Brick Mould Casing
2. Head Jamb
3. Head Jamb Weather Strip
4. Head Jamb Stop
5. Head Jamb Stop Weather Strip
6. Top Rail
7. Glazing Bead
8. Insulating Glass
9. Bottom Rail
10. Panel Drip
11. Hydro−Optimizer
12. Sill
13. Hydro−Optimizer Reinforcement
14. Sill Weather Strip
15. Stile Weather Strip
16. Sill Liner
17. Brick Mould Casing
18. Jamb
19. Jamb Weather Strip
20. Jamb Stop Weather Strip
21. Stile
22. Exterior Handle
23. Interior Handle
24. Active Panel Locking Stile
25. Mull Base Stile Weather Strip
26. Stile Weather Strip
27. Astragal Weather Strip
28. Astragal
29. Astragal Base
30. Adjustable Hinge
31. Side Jamb Parting Stop
32. Inactive Panel Locking Stile
33. Radiused Glazing Bead

Head Jamb and Sill

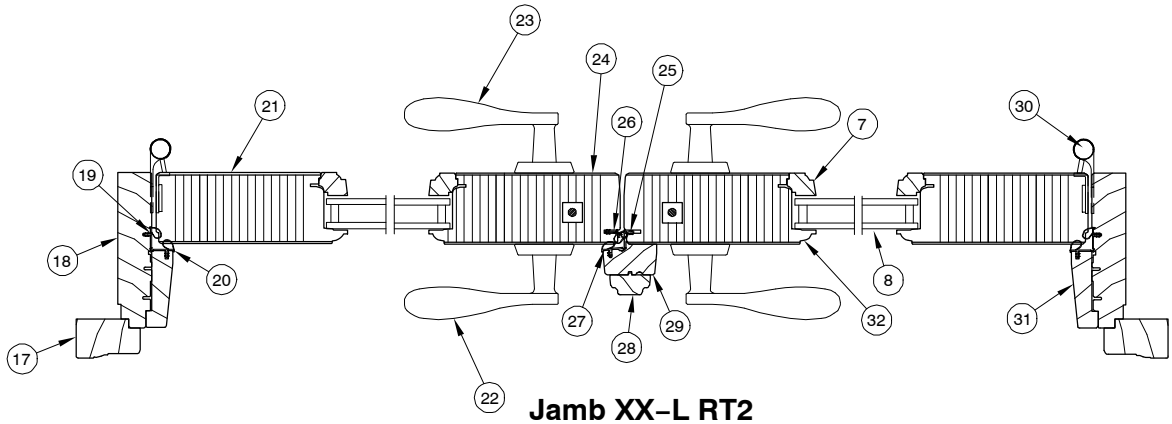

Jamb XX−L RT2

For RT6 part identification, see page 20.6

NOTE: Not to scale; specifications subject to change without notice.

PART IDENTIFICATION

Clad 2 1/4″ Inswing Arch Top French Door

Also available with IZ3 glazing.

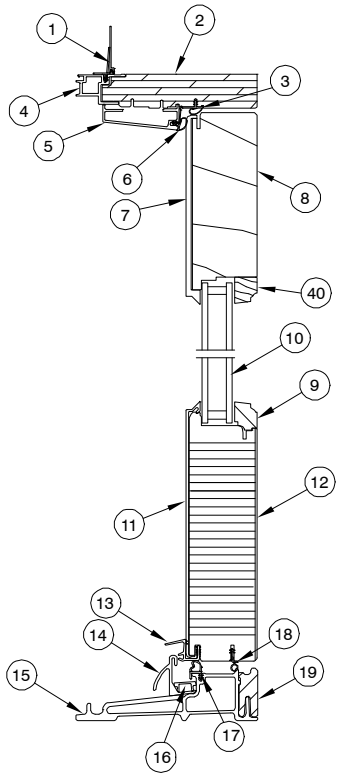

Head Jamb and Sill

1. Nailing Fin/Drip Cap
2. Head Jamb
3. Head Jamb Weather Strip
4. Head Jamb Cladding
5. Head Jamb Stop
6. Head Jamb Stop Weather Strip
7. Top Rail Cladding
8. Top Rail
9. Glazing Bead
10. Insulating Glass
11. Bottom Rail Cladding
12. Bottom Rail
13. Panel Drip
14. Hydro−Optimizer
15. Sill
16. Hydro−Optimizer Reinforcement
17. Sill Weather Strip
18. Stile Weather Strip
19. Sill Liner
20. Jamb Cladding
21. Nailing Fin
22. Jamb − RT2
23. Jamb Weather Strip
24. Jamb Stop Weather Strip
25. Stile
26. Stile Cladding
27. Exterior Handle
28. Interior Handle
29. Active Panel Locking Stile
30. Stile Weather Strip
31. Mull Base Stile Weather Strip
32. Astragal Weather Strip
33. Astragal
34. Astragal Base
35. Adjustable Hinge
36. Side Jamb Parting Stop − RT2
37. Inactive Panel Locking Stile
38. Jamb RT6
39. Side Jamb Parting Stop − RT6
40. Radiused Glazing Bead

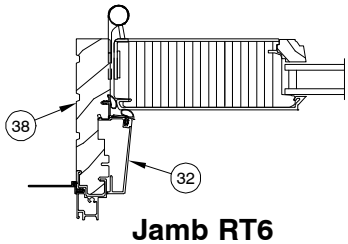

Jamb RT6

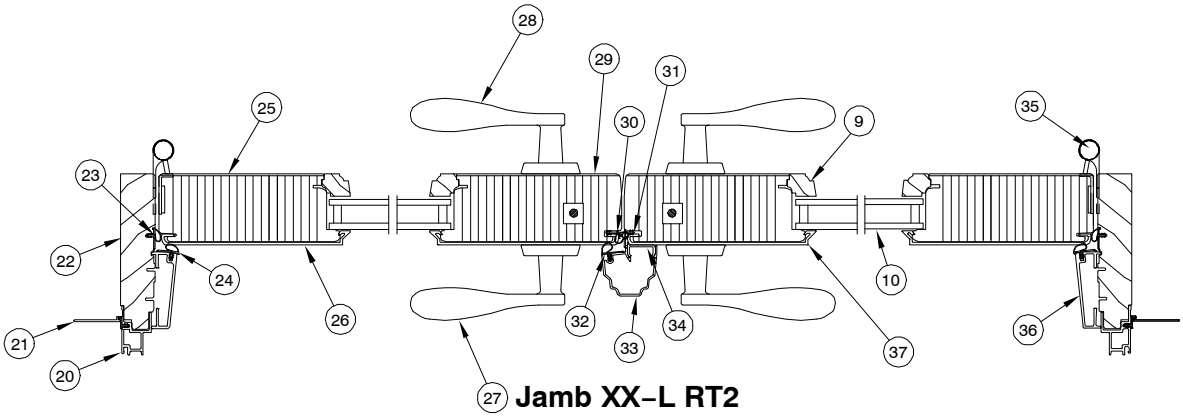

Jamb XX−L RT2

NOTE: Not to scale; specifications subject to change without notice.

PARTS

When ordering replacement 2 1/4″ Panel Door parts specify:

1. type of unit;
2. part number;
3. description.

ILLUSTRATION *NOT TO SCALE*	DESCRIPTION	COLOR	PART NO.
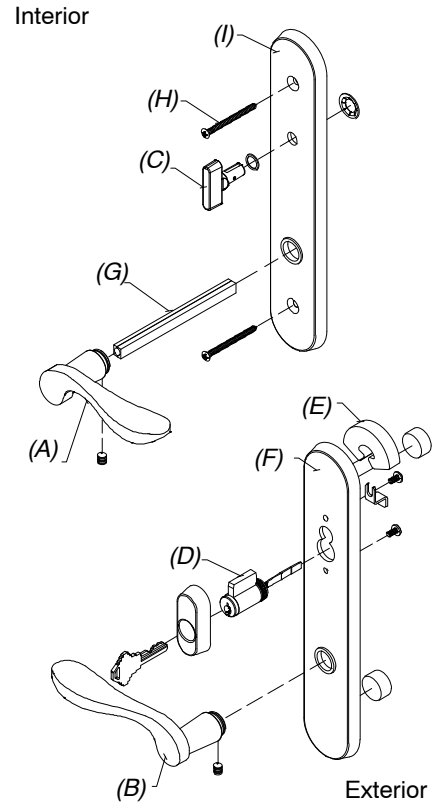	**Handle Assembly, Active Panel** *Includes:* *1 – Interior lever (A) with spindle, escutcheon plate and hardware* *1 – Exterior lever (B) with escutcheon plate and hardware* *1 – Thumb turn (C) with hardware* *1 – Keyed cylinder (D) with housing and hardware* *1 – Exterior escutcheon plate gasket (E)* *1 – Exterior escutcheon plate (F)* *1 – Two piece spindle (G)* *2 – #10–32 x 2 5/8″ Phillips oval head machine screws (H)* *1 – Interior escutcheon plate (I)* *2 – Keys*	TP AB SC WH ORBZ ORBZ PVD BS PVD SN PVD DK BZ	21448114 21448116 21448112 21448119 21448111 21448118 21448160 21448110 21448120
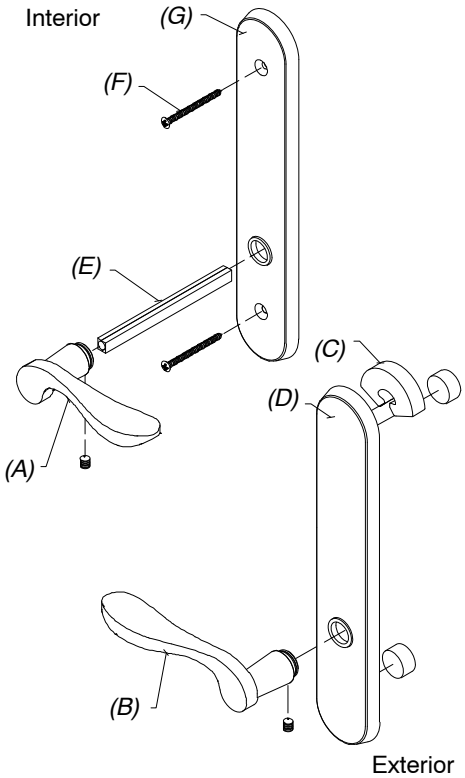	**Handle Assembly, Inactive** *Includes:* *1 – Interior lever (A) with spindle, escutcheon plate and hardware* *1 – Exterior lever (B) with escutcheon plate and hardware* *1 – Exterior escutcheon plate gasket (C)* *1 – Exterior escutcheon plate (D)* *1 – Two piece spindle (E)* *2 – #10–32 x 2 5/8″ Phillips oval head machine screws (F)* *1 – Interior escutcheon plate (G)*	TP AB SC WH ORBZ ORBZ PVD BS PVD SN PVD DK BZ	21448151 21448147 21448153 21448150 21448154 21448145 21448161 21448133 21448162

ILLUSTRATION *NOT TO SCALE*	DESCRIPTION	COLOR	PART NO.
	2 1/4″ Swinging Handle Set Kit – Interior Shades *Includes:* *1 – 3/4″ extension handle* *1 – Spindle, lever handle, 2 pc. assembly* *1 – Installation instruction*	TP WH BS PVD AB ORBZ ORBZ PVD SC SN PVD PC DK BZ	18900659 18900660 18900661 18900662 18900663 18900664 18900665 18900666 18900668 18900667
	Set Screw for Handle Assembly *Metric M6 used on all handles except ORBZ*		11881110
	#10–32 x 2 5/8″ Phillips ovalhead machine screws (2 1/4″ Door)	TP AB SC WH ORBZ ORBZ PVD BS PVD SN PVD DK BZ	11800156 11800150 11800151 11800157 11800153 11800159 11800155 11800154 11800169
	Key Cylinder (Long tail piece)	Brass Chrome	00142003 00142004
	Spindle, Two Piece Kit (Ashland) (2 1/4″ Door) *Includes:* *1 – 2 piece spindle 4.725* *2 – Set screws*		18900393
	Spindle Kit (Truth) *For ORBZ handle sets produced after March 2009.* *Includes:* *1 – 2 piece spindle, 4.725″* *2 – Set screws*	ORBZ	02100941
	Locking Rod Assembly, Top Multi–Point Lock Inswing and Outswing **Height** — **Top Locking Rod Length** CN 8–0 ht — 51 7/16″ CN10–0 ht — 75 7/16″	SS SS	05700179 05700196
	Locking Rod Assembly, Bottom Multi–Point Lock Inswing only **Height** — **Bottom Locking Rod Length** CN 8–0 ht — 34 9/32″ CN10–0 ht — 34 9/32″	SS	05700170

PARTS

ILLUSTRATION *NOT TO SCALE*	DESCRIPTION	COLOR	PART NO.
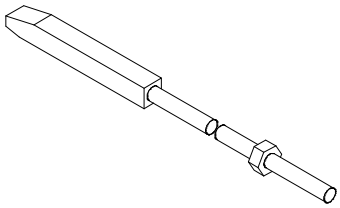	**Locking Rod Assembly, Bottom for Multi–Point Lock** Outswing only Solid stainless steel rod with 1/4″ – 20 threads **Bottom Locking Rod Length** – 34 3/4″	SS	10815179
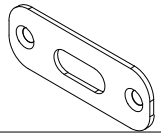	**Head Jamb/ Sill Strike Plate** *IFD head jamb and sill* *OFD head jamb*		05700082
	#10 x 3″ Phillips Flat Head Screws *For Head Jamb Strike Plate at installation.*	SS	02056011
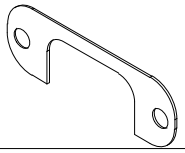	**Shim, Head Jamb Strike** *Usage: Prior to 8/31/2009* MOFD only		11100251
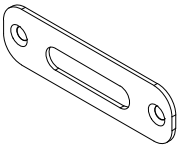	**Head Strike** RT2 one wide *Includes:* *1 – Strike* *2 – #10 x 3″ Phillips flat head screws (02056011)*		05700319
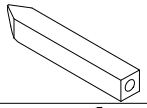	**Shoot Bolt, Beveled** RT2 one wide		10815101
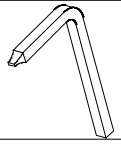	**Construction Handle**		05700133
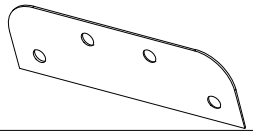	**4 1/2″ x 4 1/2″ Hinge Shim**		18900502
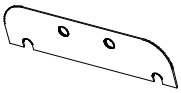	**4 1/2″ x 4 1/2″ Hinge Shim Clad Frame**		*(18900504)* NA replace with 18900502
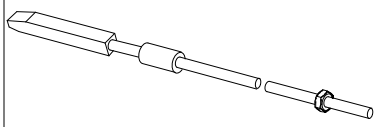	**Shoot Bolt Assembly, IZ4** *Includes:* *1 – Spacer* *1 – Hex Nut* *1 – Shoot Bolt* *1 – Lock Rod*		18900450
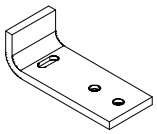	**Header Reinforcement Bracket MOFD** *Usage: 8/31/2009 – present* *Includes:* *1 – Bracket*	SS	11100249
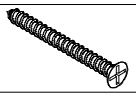	**#8x1″ Phillips Flat Head Screw** *For Header Reinforcement Bracket*	SS	11800645

ILLUSTRATION *NOT TO SCALE*	DESCRIPTION	COLOR	PART NO.
	Header Reinforcement Bracket *Usage: Prior to 8/31/2009*	Replaced with 11100249	(11100250) NA
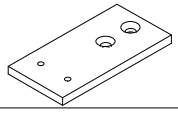	**Header Reinforcement Plate, IZ4** *Usage: Prior to 8/31/2009*	Replaced with 11100249	(18900451) NA
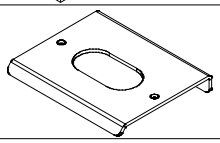	**Sill Strike Backer Plate** *Outswing*		10148006
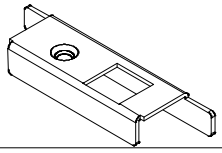	**Stile End Plate**	LH RH	10148008 10148007
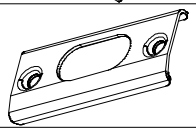	**Sill Strike, IZ3** *Outswing*		10148005
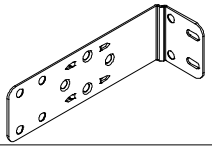	**Structural Bracket, 4 9/16″**	Each 50/Box 100/Box	11860036 11860037 11860038
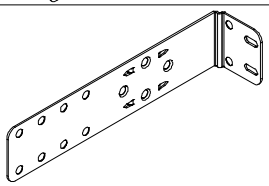	**Structural Bracket, 6 9/16″**	Each 50/Box 100/Box	11860032 11860033 11860034
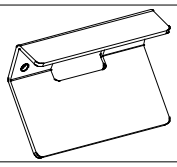	**Sill Strike Backer Plate** *Inswing*		10148009
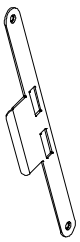	**Strike Plate, Jamb and Inactive Panel –Mortise Lock or Multi–Point Lock** ***5/10/99 – Present (Amerock)*** *Inswing* *Includes:* *1 – Jamb strike plate* *2 – #8x1″ Brass Phillips flathead wood screws**	Stainless Steel Antique Brass ORBZ PVD Brass PVD	05700300 05700301 05700302 10148177
	Strike Plate, Inactive Panel–Mortise Lock or Multi–Point Lock ***5/10/99 – Present (Amerock)*** *Inswing* *Includes:* *1 – Jamb strike plate* *2 – #8x1″ Brass Phillips flathead wood screws**		

PARTS

ILLUSTRATION *NOT TO SCALE*	DESCRIPTION	OPER./COLOR	PART NO.
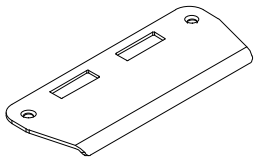	**Strike Plate, Jamb – Mortise Lock or Multi–Point Lock***		
	Outswing	Stainless Steel	05700309
	Includes:	Antique Brass	05700310
	1 – Jamb strike plate	ORBZ PVD	05700311
	2 – #8x1″ Brass Phillips flathead wood screws	Brass PVD	10148182
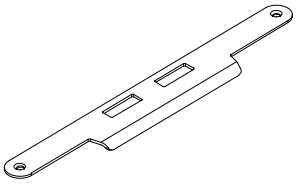	**Strike Plate, Panel – Mortise Lock or Multi–Point Lock***		
	Outswing	Stainless Steel	05700312
	Includes:	Antique Brass	05700313
	1 – Jamb strike plate	ORBZ PVD	05700314
	2 – #8x1″ Brass Phillips flathead wood screws	Brass PVD	10148183
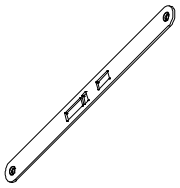	**Cover Plate, Active Mortise Lock or Multi–Point Lock***		
	Includes:	Stainless Steel	05700306
	1 – Cover plate	Antique Brass	05700307
	2 – #8x1″ Phillips flathead wood screws	ORBZ PVD	05700308
		Brass PVD	10148179
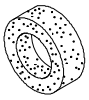	**Lug seals**		00142046
	Pkg, Panel Drip – COFD		
	July 30, 2012 – Present		
	Includes:		
	A2408 Panel Drip, Foam Tape		
	#6 x 1/4″ flat head screws		
	1–6	Beige	11100272
	2–0	Beige	11100273
	2–6	Beige	11100274
	2–8	Beige	11100275
	3–0	Beige	11100276
	1–6	Bronze	11100282
	2–0	Bronze	11100283
	2–6	Bronze	11100284
	2–8	Bronze	11100285
	3–0	Bronze	11100286
	Pkg, Panel Drip – WOFD		
	July 30, 2012 – Present		
	Includes:		
	A2408 Panel Drip, Foam Tape		
	#6 x 1 1/4″ flat head screws		
	1–6	Beige	11100277
	2–0	Beige	11100278
	2–6	Beige	11100279
	2–8	Beige	11100280
	3–0	Beige	11100281
	1–6	Bronze	11100287
	2–0	Bronze	11100288
	2–6	Bronze	11100289
	2–8	Bronze	11100290
	3–0	Bronze	11100291

* Stainless Steel – 11800645, Dark Bronze – 11800652, PVD Brass – 11800536

NOTE: Dark Bronze screws are used with Antique Brass and Oil Rubbed Bronze PVD

ILLUSTRATION *NOT TO SCALE*	DESCRIPTION	HINGE COLOR	LEFT PART NO.	RIGHT PART NO.
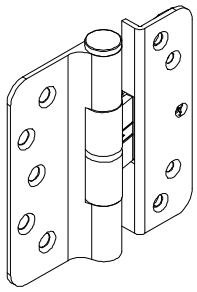	**Hinge Kit, Adjustable** *Includes:* *1 – Adjustable hinge* *1 – #10x2 1/2″Phillips flathead wood screws (jamb)* *5 – #10x3/4″Phillips flathead wood screws (jamb, stationary stile)* *4 – #8x1 1/2″Phillips flathead wood screws (panel)* NOTE: Hinge part number includes the color matched screws. If you need to order the screws separately, they are listed below.	TP GT SF DKBZ AB WH SC ORBZ ORBZ PVD BS PVD SN PVD	02101216 02101213 02101218 02101217 02101210 02101214 02101212 02101219 02101211 02101215 02101220	02101227 02101224 02101229 02101228 02101221 02101225 02101223 02101230 02101222 02101226 02101231

SCREW DESCRIPTION	SCREW COLOR/PART NO.		MATCHING HINGE COLOR
4 – #8x1 1/2″Phillips flathead wood screws (panel)	TP GT WH DKBZ BS PVD SS	11865177 11865172 11865173 02058013 11865176 11865175	TP GT WH AB, ORBZ PVD, DKBZ, ORBZ BS PVD, SC, SF, SN PVD
5 – #10x 3/4″Phillips flathead wood screws (jamb) (stationary stile)	TP GT WH DKBZ BS PVD CHROME	11800674 11800670 11800671 11800669 11800673 11800672	TP GT WH AB, ORBZ PVD, DKBZ, ORBZ BS PVD, SC, SF, SN PVD
1 – #10x2 1/2″Phillips flathead wood screws (jamb)	TP GT WH DKBZ BS PVD SS	11800683 11800681 11800682 11800680 11800679 11800684	TP GT WH AB, ORBZ PVD, DKBZ, ORBZ BS PVD, SC, SF, SN PVD

ILLUSTRATION *NOT TO SCALE*	DESCRIPTION	COLOR	PART NO.
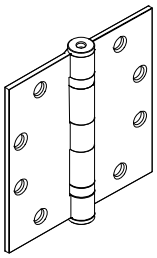	**Hinge , 4 1/2″ X 4 1/2″ Ball Bearing** *Includes:* *1 – Hinge* *6 – #12x1″Phillips flat head wood screws* *2 – #12x2 1/2″Phillips flat head screws* NOTE: Hinge part number includes the color matched screws. If you need to order the screws separately, use the individual screw part number noted in the charts below.	SS SC Brass BZ Brass BS	02100162 02101166 02101167 02101165
		Steel Hinge Available for Inswing Doors Only SC Steel BZ Steel	 02101163 02101164

Screw Description	For Hinge	Color	Part No.
#12x1″Phillips flat head wood screws (SC=US26D) (BZ=US10A) (BS=US3) (SS=US32D)	SS SC Steel SC Brass	SS	02056069
	BZ Steel BZ Brass	DKBZ	02056010
	BS	BS	02056068

Screw Description	For Hinge	Color	Part No.
#12x2 1/2″Phillips flat head screws (SC=US26D) (BZ=US10A) (BS=US3) (SS=US32D)	SS SC Steel SC Brass	SS	02010311
	BZ Steel BZ Brass	DKBZ	02056067
	BS	BS	02010310

PARTS

ILLUSTRATION *NOT TO SCALE*	DESCRIPTION	OPER./COLOR	PART NO.
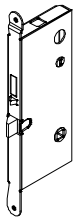	**Mortise Lock, Active Multi–Point Lock** (latch, dead bolt and head/foot shoot bolts)		05700130
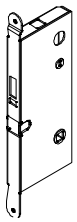	**Mortise Lock, Inactive Panel Multi–Point Lock** (head/foot shoot bolts)		05700131
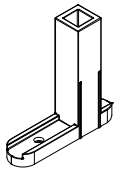	**End Bolt Guide** *Includes:* *1 – End Bolt guide* *1 – #8x1 1/2″ Phillips panhead wood screw (11865159)*		10815199
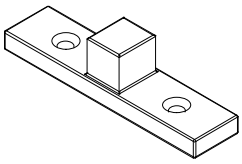	**Sill Bolt, Stationary Panel** Includes: *2 – #8 x 3″ Phillips flathead wood screws (11800830)*	Zinc Die Cast	11101856
	Drain Plug, Sill Inswing	BG BZ	10500253 10500249
	Head Jamb Spacer Tack; Stationary Panel		11860424
	Jamb Spacer Tack; Stationary Panel 3/4″ Diameter Head		11860423
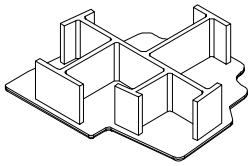	**Clad Mull Casing End Plug** ***(Clad Doors Only)*** Inswing	LH BG RH BG LH BZ RH BZ	10500255 10500254 10500267 10500266
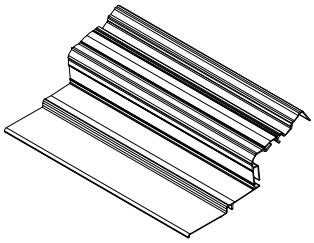	**Threshold Protector** 30″ length Inswing	Pkg 20	11869675 11869676

ORDERING REPLACEMENT PANELS FOR THE 2 1/4″ INSWING AND OUTSWING FRENCH DOOR

When ordering replacement panels specify:

1. OM of panel;
   NOTE: OM of panel does not include astragal, mull casing or sweep.
2. active, inactive or stationary;
   a. Active – comes prepped for multi–point mortise lock and standard Marvin handle set. If Marvin Architectural Hardware prep is needed, specify brand.
   b. Inactive – comes prepped for multi–point lock and standard Marvin handle–set. If Marvin Architectural Hardware prep is needed, specify brand.
   c. Stationary – specify configuration and astragal or mull casing (if applicable).
3. handing;
4. glazing;
5. finish.
6. glazing bead profile
   a. bevel
   b. square

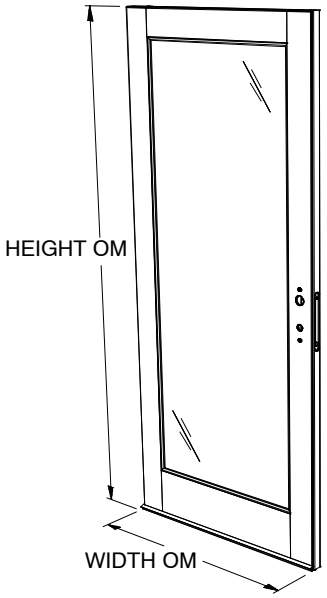

Wood or Clad Panel

NOTE: Weather strip is included with all panels (where applicable).

Active panels include panel sweep and multi–point mortise lock system.

Inactive panels include panel sweep, astragal, and multi–point lock system.

Stationary 1 wide panels include panel sweep.

WEATHER STRIP

When ordering replacement weather strip specify:

1. quantity;
2. length;
3. part number;
4. description.

ILLUSTRATION *NOT TO SCALE*	DESCRIPTION	LENGTH	COLOR	PART NUMBER
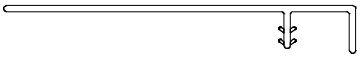	**Weather Strip, Frame** V1707	120″ (3048)	BG BK	11191299 11191399
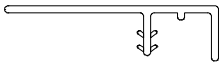	**Weather Strip, Frame** Outswing Arch Top V1732 *3–31–2009 to present* *Replaced V1304*	150″ 150″	BG BK	11191499 11191599
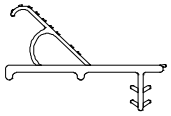	**Weather Strip, Frame** Outswing Arch Top V1733 *3–31–2009 to present* *Replaced V1304*	151″ 151″	BG BK	11191699 11191799
	Dust Block, Part Stop 1 3/8″ x 3/8″x 1/2″		GY BG	15600010 15600011
	Dust Block, Astragal or Panel 1 3/8″ x 1/4″x 3/8″			10500049
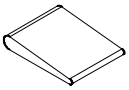	**Small Corner Seal** Inswing		BG BK	01040368 01040369
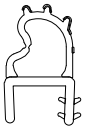	**Flex-Bulb Weather Strip, Sill** V794 Inswing	87 9/16″ 164 3/4″ 164 3/4″	BG BG BK	15180276 15180798 15180799
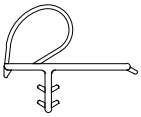	**Offset Bulb Weather Strip, Parting Stop, Frame, Mull Casing, Transom and Astragal** V796	41 1/4″ 92 7/8″ 92 7/8″ 164 13/16″	BG BG BK BG	15171136 15170082 15170083 15172140
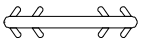	**Connecting Barb** V803 NOTE: Color may vary depending on current stock.	Specify Length		15812999

WEATHER STRIP

ILLUSTRATION *NOT TO SCALE*	DESCRIPTION	LENGTH	OPER./COLOR	PART NUMBER
	Inactive Panel Stile Center V780 Inswing	150″ 150″	BG BK	15174099 15174098
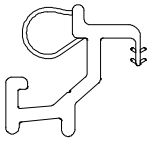	**Weather Strip, Sill** V1659 Outswing/Arch Top Outswing	35 17/64″ 35 17/64″ 41 17/64″ 70 29/64″ 70 29/64″ 82 29/64″ 82 29/64″ 150″ 150″	BG BK BG BG BK BG BK BG BK	11197030 11197130 11197036 11197060 11197160 11197070 11197170 11197099 11197199
	Weather Strip, Stile V020 Outswing	79 9/16″ 92 15/16″ 150″ 150″	BG BG BG BK	11197968 11197982 11197999 11197998
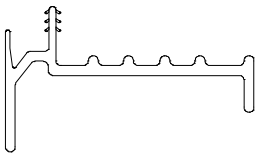	**Sweep, Active and Inactive Panel** V1713 Outswing/Arch Top Outswing	CN 2/6 CN 2/6 CN 3/0 CN 3/0 CN 3/6 CN 3/6	BG BK BG BK BG BK	11181126 11181226 11181130 11181230 11181136 11181236
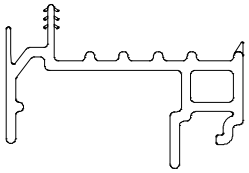	**Sweep, Stationary Panel** V1657 Outswing/Arch Top Outswing	150″ 150″	BG BK	11181399 11181499
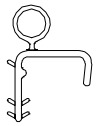	**Weather Strip, Panel Cover** V018 Outswing	150″ 150″	BG BK	11197799 11197798
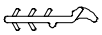	**Weather Strip, Inactive Panel** V1706 Outswing/Arch Top Outswing	121″ 121″	BG BK	15618199 15618299

ORDERING REPLACEMENT WOOD PARTS FOR THE 2 1/4″ FRENCH DOOR

	Wood	Clad
Mull Casing	W8775	W8775
Glazing Cap	W9949	
First Mull Casing and Astragal	W1455	W1455
Head Jamb and Jamb Part Stop – Inswing	W6535	W6535
Astragal Cover and Transom Mull Cover	W7554	W7554
Stationary Sweep Filler	W3297	
Sill Liner (Oak) – Inswing	W8661	
Sill Liner (Oak) – Outswing	W2528	
Part Stop	W10401	
Head Jamb Part Stop	W9983	
Radius Head Jamb Part Stop – Outswing	W9951	W9951

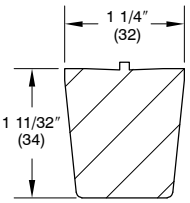

W8775
Mull Casing

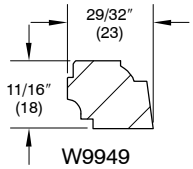

W9949
Glazing Cap

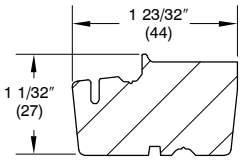

W1455
First Mull Casing
and Astragal

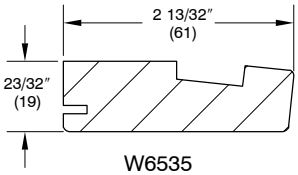

W6535
Head Jamb and Jamb
Part Stop – Inswing

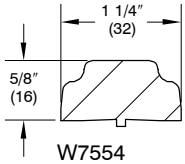

W7554
Astragal Cover and
Transom Mull Cover

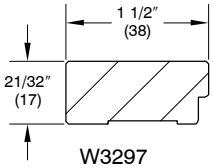

W3297
Stationary Sweep
Filler – Outswing

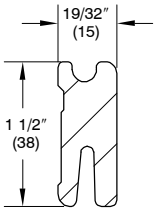

W8661
Sill Liner – Inswing

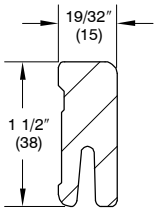

W2528
Sill Liner – Outswing

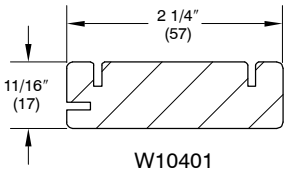

W10401
Part Stop – Outswing

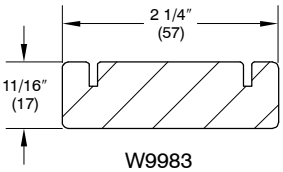

W9983
Radius (RT6)
Head Jamb Part Stop
– Outswing

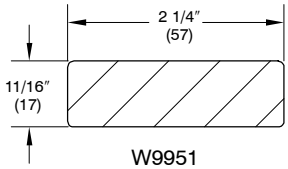

W9951
Radius (RT2)
Head Jamb Part Stop
– Outswing

TO ORDER REPLACEMENT PARTS

When ordering replacement parts specify:

1. profile number;
2. rough opening;
3. length;
4. handing;
5. finish (where applicable).

ORDERING REPLACEMENT VINYL, ALUMINUM OR FIBERGLASS PARTS FOR THE 2 1/4″ FRENCH DOOR

	Wood	Clad
Hydro–Optimizer Reinforcement – Beige or Bronze	A1222	A1222
Hydro-Optimizer – Beige or Bronze	A1251	A1251
Head Jamb, Jamb Parting Stop	– – –	A836
Astragal Cladding	– – –	A772
Mullion Casing Base	– – –	A771
Ultrex Sill, 4 9/16″ Jambs – Beige or Bronze	F256	F256
Ultrex Sill, 6 9/16″ Jambs – Beige or Bronze	F257	F257
Panel Drip – Beige or Black	V940	V940
Stationary Panel Sill Spacer – Beige or Black	V941	V941
Panel Drip (Active and Stationary Panels)	A2408	A2408

A1222 – Hydro–Optimizer Reinforcement Inswing
144″
BG – 18548499
BZ – 18548399

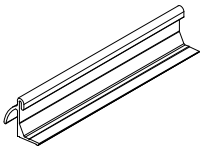

A1251 – Hydro-Optimizer Inswing

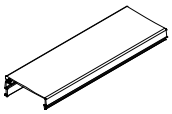

A836 – Head Jamb, Jamb Parting Stop Inswing

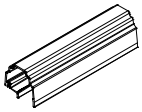

A772 – Astragal Cladding Inswing

A771 – Mullion Casing Base Inswing

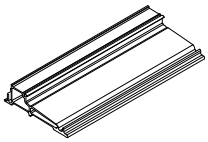

F256 – Ultrex Sill, 4 9/16″ Jamb Inswing

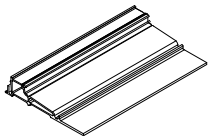

F257 – Ultrex Sill, 6 9/16″ Jambs

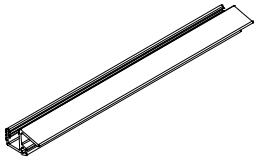

V940 – Panel Drip Inswing

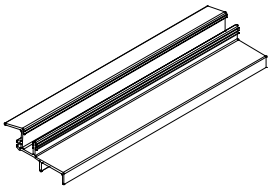

V941 – Stationary Panel Drip/Sill Spacer Inswing

A2408 – Panel Drip Outswing

TO ORDER REPLACEMENT PARTS

When ordering replacement parts specify:

1. profile number;
2. rough opening;
3. length;
4. handing;
5. finish (where applicable).

OBSOLETE PARTS

ILLUSTRATION *NOT TO SCALE*	DESCRIPTION	OPER./COLOR	PART NO.
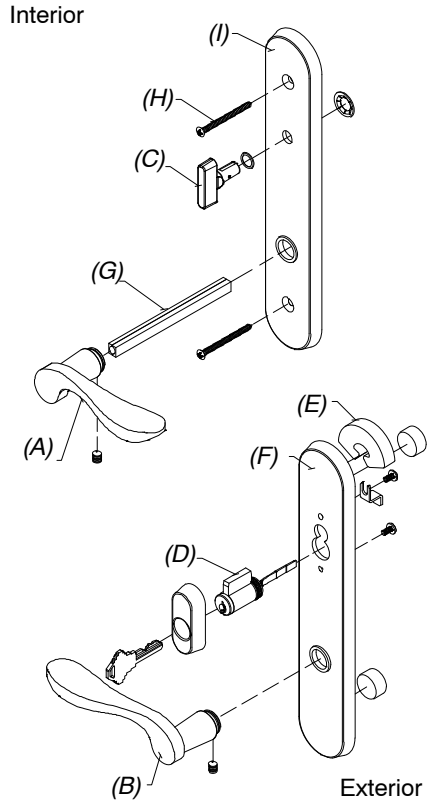	**Handle Assembly, Active Panel** *Includes:* *1 – Interior lever (A) with spindle, escutcheon plate and hardware* *1 – Exterior lever (B) with escutcheon plate and hardware* *1 – Thumb turn (C) with hardware* *1 – Keyed cylinder (D) with housing and hardware* *1 – Exterior escutcheon plate gasket (E)* *1 – Exterior escutcheon plate (F)* *1 – Two piece spindle (G)* *2 – #10–32 x 2 1/2″ Phillips oval head machine screws (H)* *1 – Interior Escutcheon plate (I)* *2 – Keys*	PC	21448117
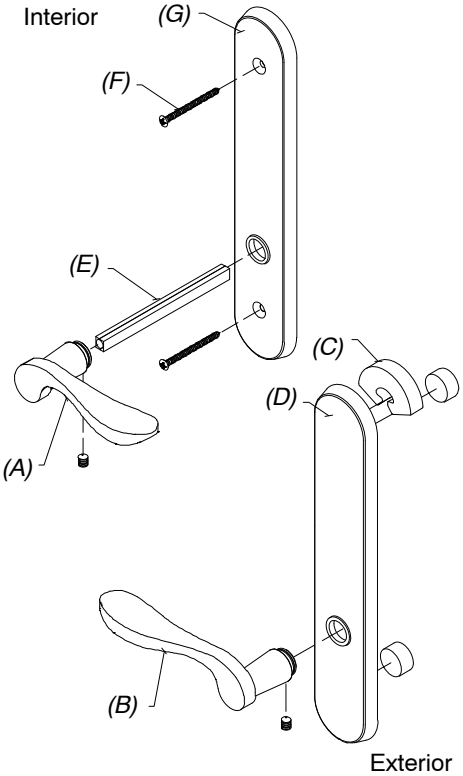	**Handle Assembly, Inactive** *Includes:* *1 – Interior lever (A) with spindle, escutcheon plate and hardware* *1 – Exterior lever (B) with escutcheon plate and hardware* *1 – Exterior escutcheon plate gasket (C)* *1 – Exterior escutcheon plate (D)* *1 – Two piece spindle (E)* *2 – #10–32 x 2 1/2 ″ Phillips oval head machine screws (F)* *1 – Interior Escutcheon plate (G)*	PC	21448148
	Stop clip with screws NA as individual part		NA

OBSOLETE WEATHER STRIP

When ordering replacement weather strip specify:

1. quantity;
2. length;
3. part number;
4. description.

ILLUSTRATION *NOT TO SCALE*	DESCRIPTION	LENGTH	OPER./COLOR	PART NUMBER
	Weather Strip, Frame Pre 3–30–2009 V1304 Arch Top	120″ (3048) 144″ (3658)	BG BK BG BK	11199123 11199124 11199144 11199145
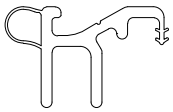	**Weather Strip, Sill** Pre 3–30–2009 V776 Outswing	 87 11/16″ 164 7/8″ 164 7/8″	 BG BG BK	 11197276 11197296 11197297
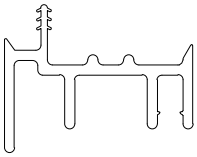	**Sweep, Active and Inactive Panel** Pre 3–30–2009 V779 Outswing	CN 2/0 CN 2/6 CN 2/8 CN 3/0 CN 3/0 CN 3/6 CN 3/6	BG BG BG BG BK BG BK	11197420 11197426 11197428 11197430 11197431 11197436 11197437
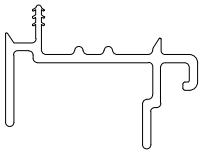	**Sweep, Stationary Panel** Pre 3–30–2009 V778 Outswing	CN 3/0 CN 3/0 CN 3/6 150″ 150″	BG BK BG BG BK	11197330 11197331 11197336 11197399 11197398

ORDERING OBSOLETE REPLACEMENT WOOD, VINYL, ALUMINUM OR FIBERGLASS PARTS FOR THE 2 1/4″ FRENCH DOOR

TO ORDER REPLACEMENT PARTS

When ordering replacement parts specify:

1. profile number;
2. rough opening;
3. length;
4. handing;
5. finish (where applicable).

	Wood	Clad
Jamb Stop	W8715	W8715
Glazing Cap	W4019	

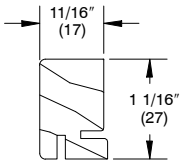

W8715 – Stop, Jamb

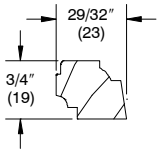

W4019 – Glazing Cap